SIZE491C, 491F PUSH PULL SOLENOID

UNIT : mm (inch)
SHOWN ENERGIZED

WEIGHT : 265g
PLUNGER (C) : 70g
PLUNGER (F) : 60g

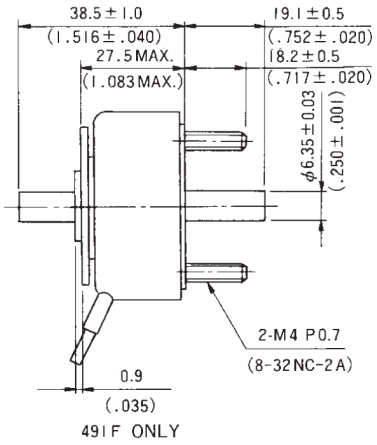

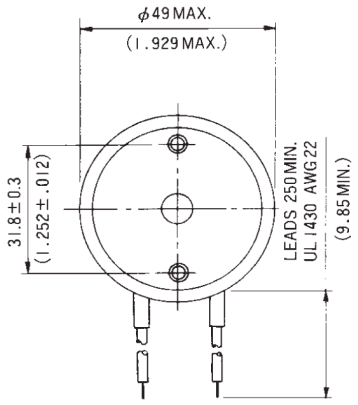

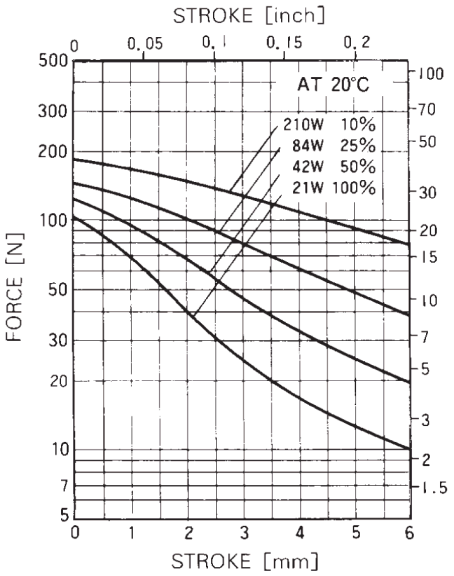

STROKE - FORCE (491C)

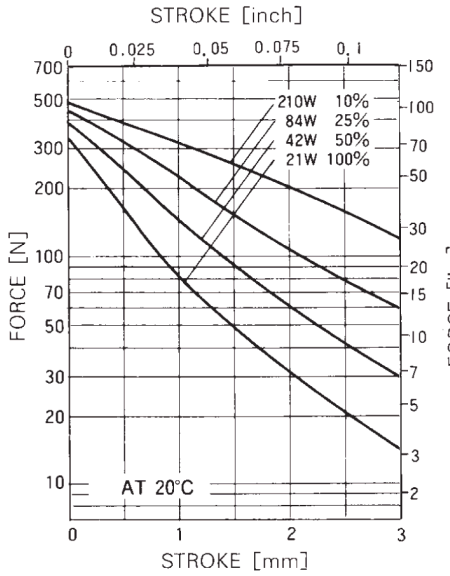

STROKE - FORCE (491F)

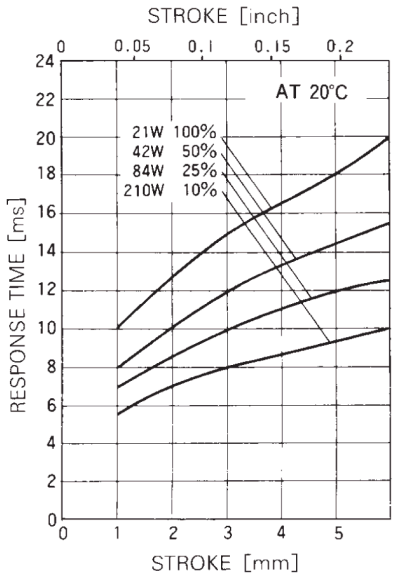

STROKE - RESPONSE TIME

COIL DATA

Heat sink : 190×190×3mm aluminum

duty cycle = "on" time / ("on" time + "off" time) ×100%			100% continuous	50% or less	25% or less	10% or less
MAX. "on" time in seconds			∞	100	36	10
watts at 20°C			21	42	84	210
ampere-turns at 20°C			1015	1440	2030	3210
AWG no.	resistance Ω±10% (at 20°C)	no. turns	volts DC			
21	1	228	4.5	6.4	8.9	14.1
22	1.68	301	5.7	8.1	11.4	17.9
23	2.7	384	7.2	10.1	14.3	23
24	4.3	486	9	12.7	18	28
25	6.66	590	11.5	16.2	23	36
26	10.3	737	14	20	28	44
27	15.7	900	17.7	25	35	56
28	26.6	1190	23	32	45	72
29	38	1380	28	40	56	89
30	62.1	1768	36	51	71	113
31	96.1	2166	45	64	90	143
32	157	2816	57	80	113	179
33	241	3432	71	101	143	226
34	364	4108	90	128	180	285
35	566	4920	117	166	234	370
36	910	6340	146	207	292	462
37	1224	6800	183	260	366	—

(주)신우솔텍 TEL : 02-584-5995